RECEPTOARE OPTICE

FOTODIODE P-I-N
FOTODIODE CU AVALANSA

FOTODIODE P-I-N

Constructia fotodiodei

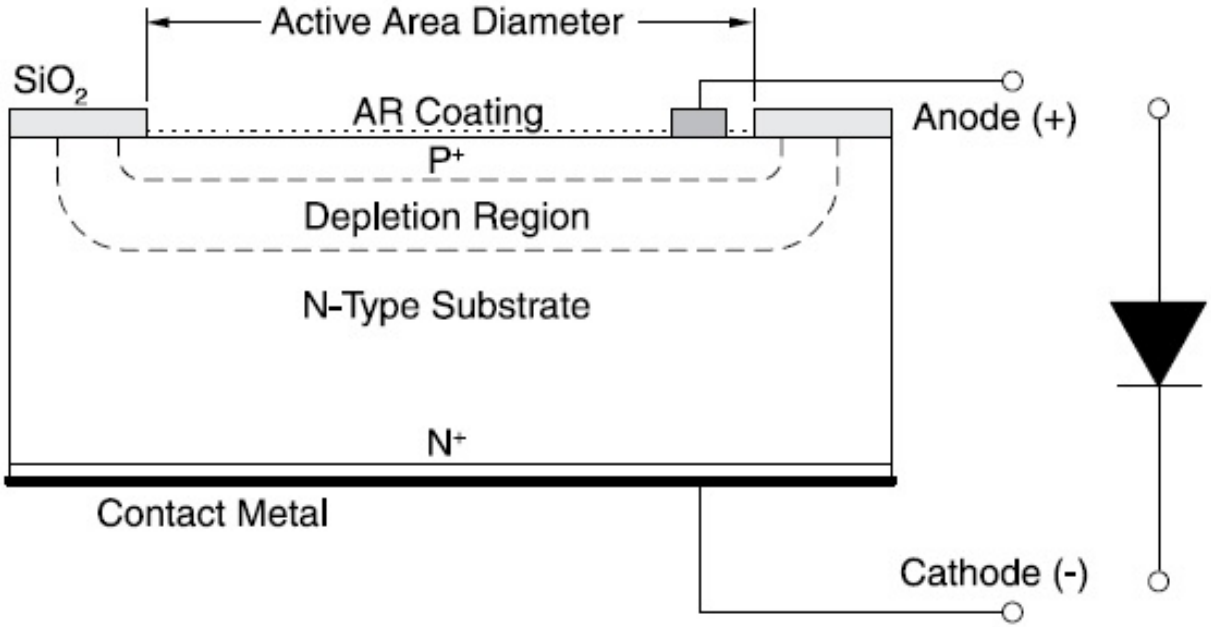

PRINCIPIUL DE FUNCTIONARE

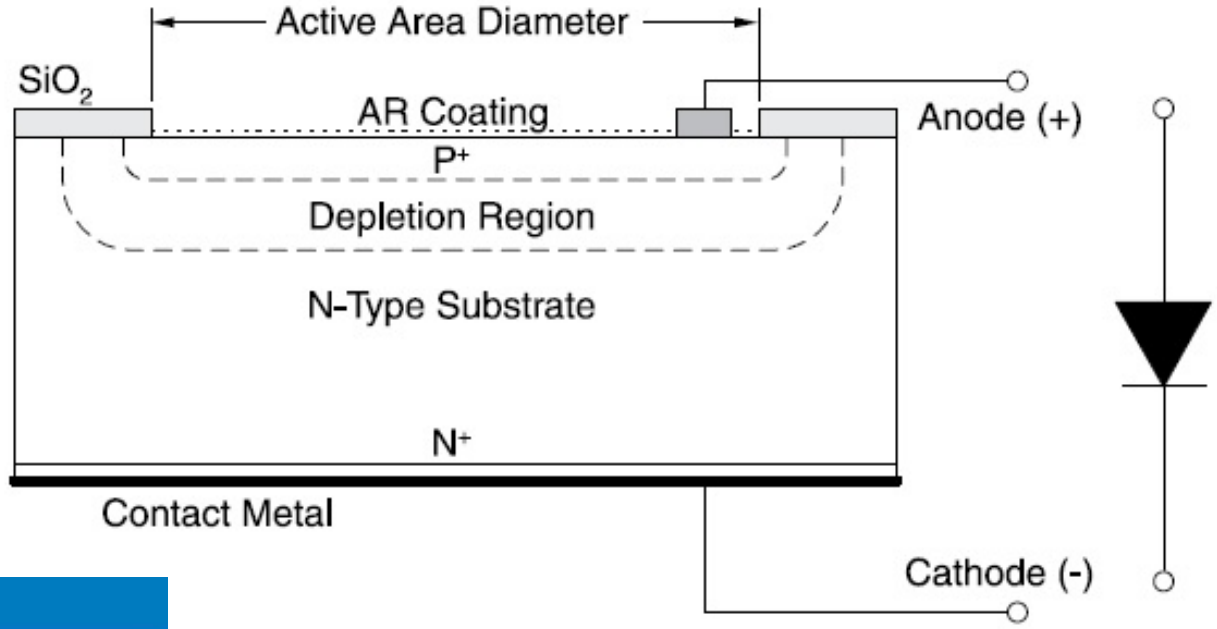

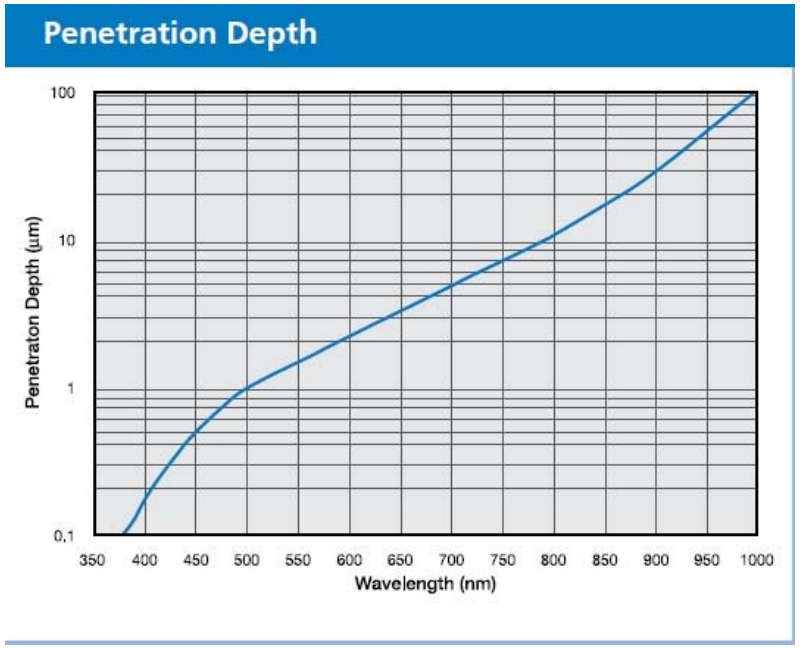

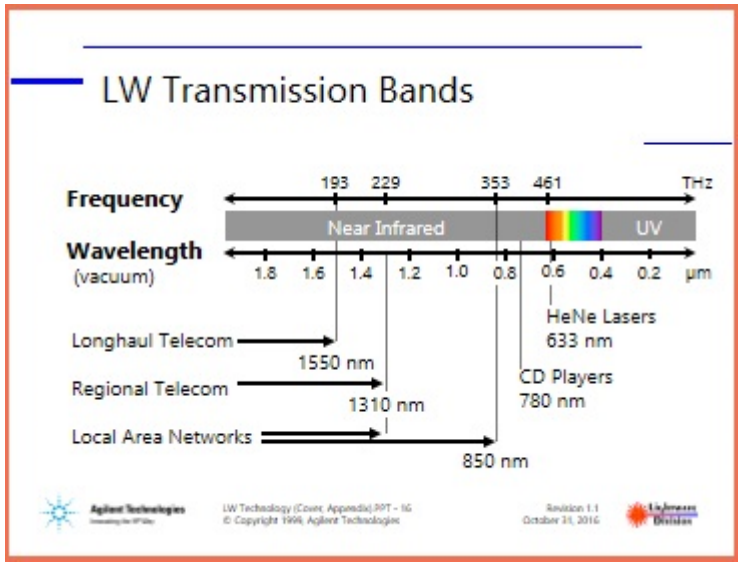

Caracterisitici Electrice

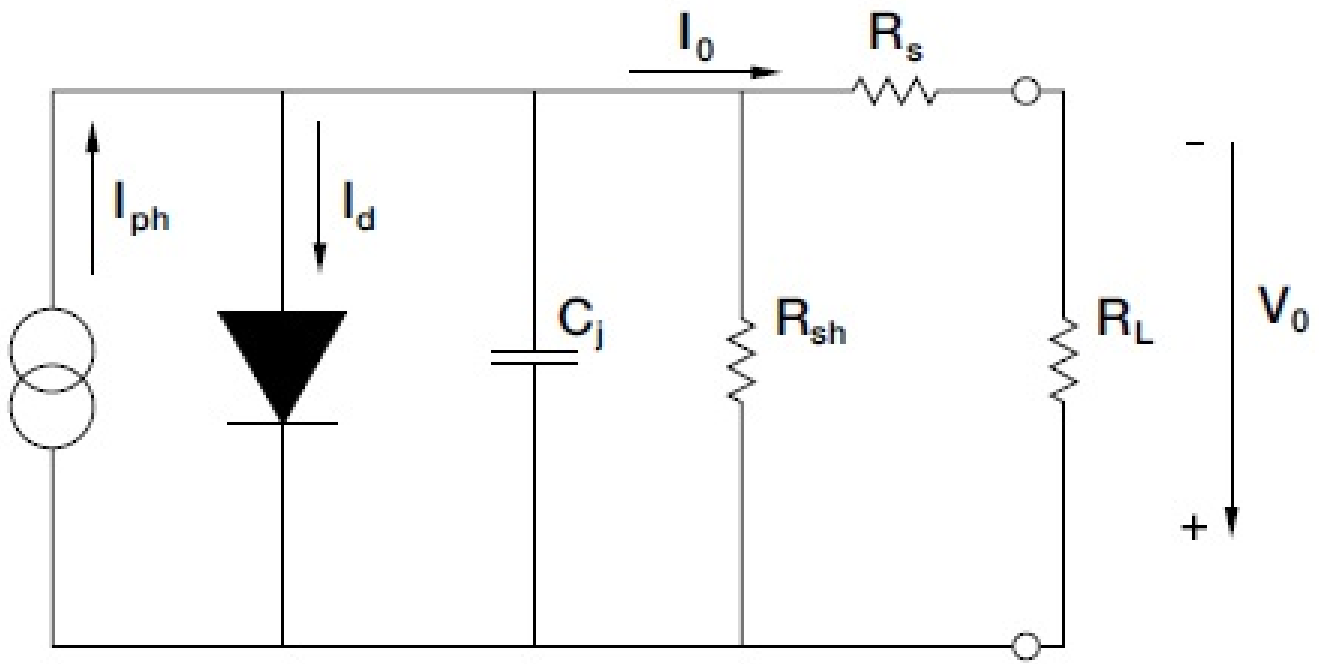

$$R_s = \frac{(W_s - W_d)\rho}{A} + R_c \quad (1)$$

Caracterisitici Electrice - 2

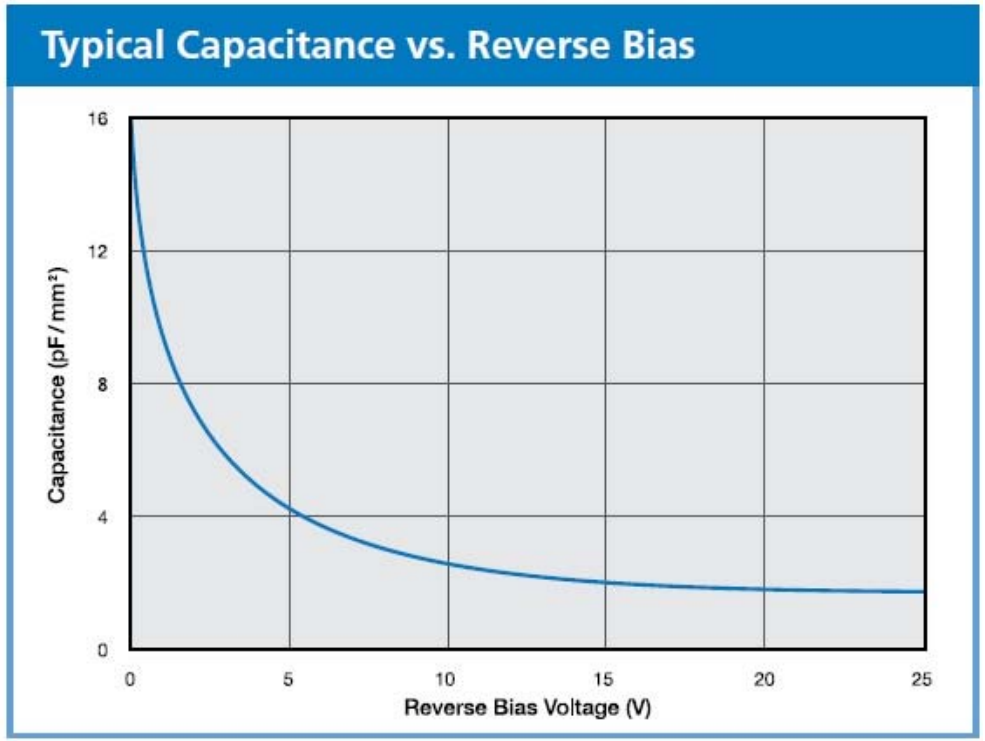

$$C_j = \frac{\varepsilon_{Si}\varepsilon_0 A}{\sqrt{2\varepsilon_{Si}\varepsilon_0 \mu\rho\left(V + V_{bi}\right)}} \qquad (2)$$

$$= A\sqrt{\frac{\varepsilon_{Si}\varepsilon_0}{2\mu\rho\left(V + V_{bi}\right)}}$$

$$= \frac{\varepsilon_{Si}\varepsilon_0 A}{W_d}$$

$$W_d = \sqrt{2\varepsilon_{Si}\varepsilon_0 \mu\rho\left(V + V_{bi}\right)}$$

Caracterisitici Electrice - 3

$$t_r = \frac{0.35}{f_{3dB}} \quad (3)$$

$$t_{RC} = 2.2RC \quad (4)$$

$$t_R = \sqrt{t_{DRIFT}^2 + t_{DIFUZIE}^2 + t_{RC}^2} \quad (5)$$

Caracteristici optice

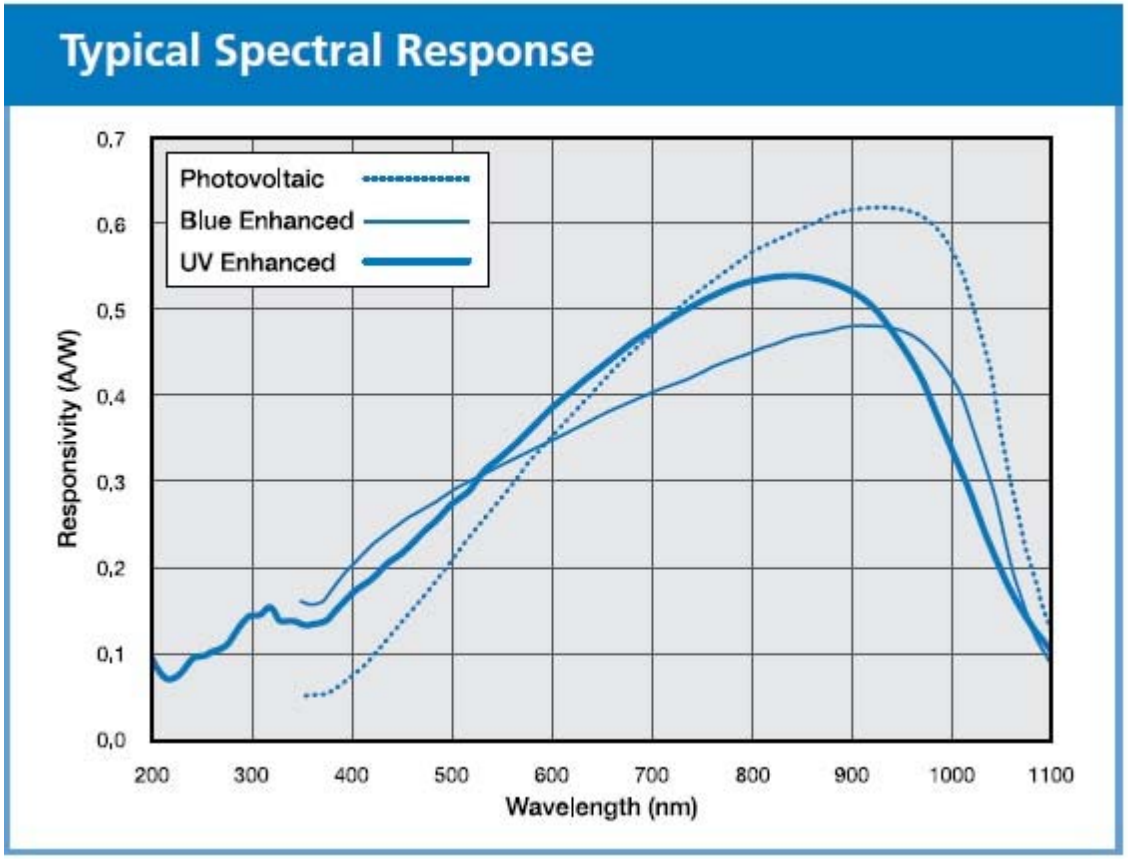

$$R_\lambda = \frac{I_P}{P} \qquad (6)$$

Influenta temperaturii

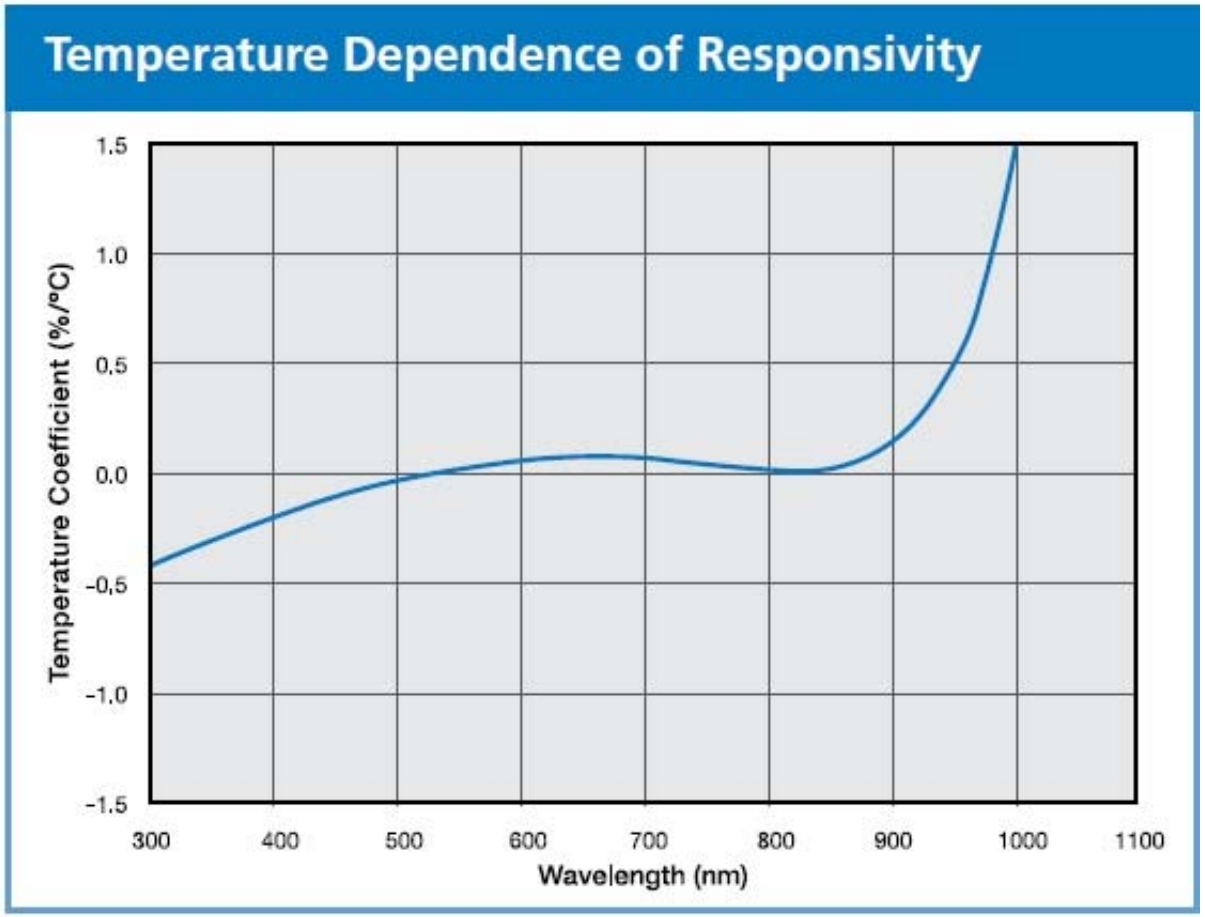

Caracteristica spectrala

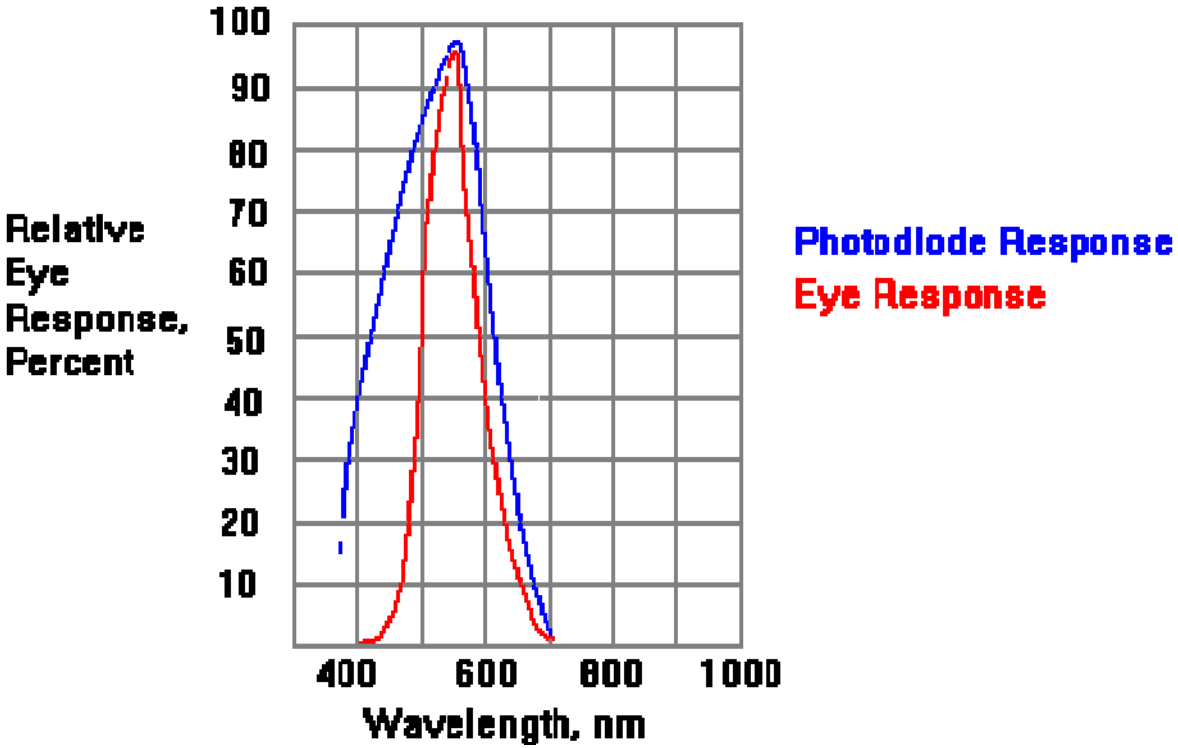

Eficienta cuantica

$$Q.E. = \frac{R_{\lambda,real}}{R_{\lambda,ideal}} = R_\lambda \frac{hc}{\lambda q} = 1240 \frac{R_\lambda}{\lambda} \qquad (7)$$

Caracteristicile I-V

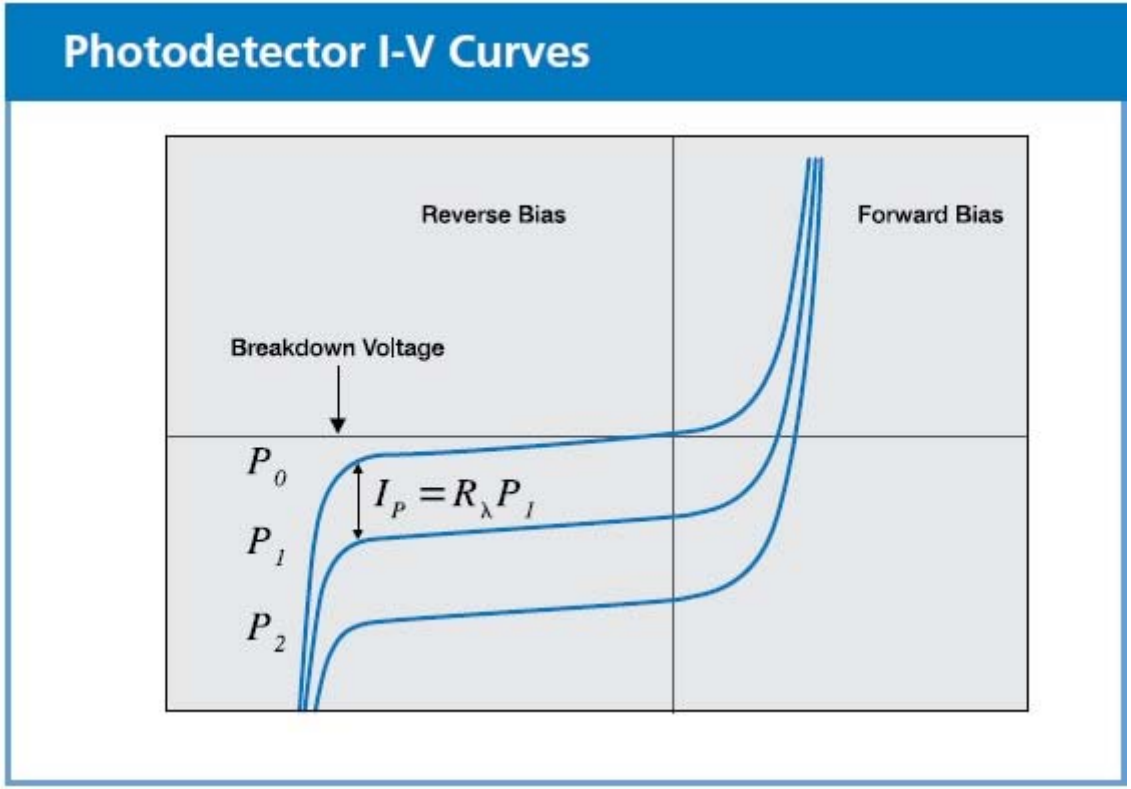

$$I_D = I_{SAT}\left(e^{\frac{qV}{k_B T}} - 1\right) \quad (8)$$

$$\boxed{I_{TOTAL} = I_{SAT}\left(e^{\frac{kV}{kT}} - 1\right) - I_P \quad (9)}$$

Zgomotul in fotodiode

- Zgomot de alice
- Zgomot termic

Zgomotul in fotodiode

- Zgomot de alice

$$I_{sn} = \sqrt{2q\left(I_P + I_D\right)\left(\Delta f\right)_{PD}} \qquad (10)$$

Zgomotul in fotodiode

- Zgomot termic

$$I_{jn} = \sqrt{\frac{4k_B T\left(\Delta f\right)_{PD}}{R_{SH}}} \qquad (11)$$

Zgomotul in fotodiode

- Zgomotul total

$$I_{tn} = \sqrt{I_{sn}^2 + I_{jn}^2} \qquad (12)$$

Zgomotul in fotodiode

- Puterea echivalenta de zgomot

$$NEP = \frac{I_{tN}}{R_\lambda} = \frac{I_{tn} / \sqrt{\Delta f}}{R_\lambda} \qquad (13)$$

Distributia spectrala a zgomotului

$$\boxed{\left\langle I_n^2(t)\right\rangle = \int_0^\infty S_n(f)\,df}$$

$$S_{sn}(f) = 2q\left(I_P + I_D\right)$$

$$I_{sn} = \sqrt{2q\left(I_P + I_D\right)\left(\Delta f\right)_{PD}}$$

$$I_{sN}\left(A/\sqrt{Hz}\right) = I_{sn}\Big/\sqrt{\left(\Delta f\right)_{PD}} = \sqrt{\left[\sqrt{2q\left(I_P + I_D\right)}\right]}$$

DATE DE CATALOG

ELECTRO-OPTICAL CHARACTERISTICS RATING (TA)= 23°C UNLESS OTHERWISE NOTED

SYMBOL	CHARACTERISTIC	TEST CONDITIONS	MIN	TYP	MAX	UNITS
I_{SC}	Short Circuit Current	H = 100 fc, 2850 K	50	60		μA
I_D	Dark Current	V_R = 10 V		2	30	nA
R_{SH}	Shunt Resistance	V_R = 10 mV	0.5	2		GΩ
C_J	Junction Capacitance	V_R = 10 V, f = 1 MHz		6	10	pF
λrange	Spectral Application Range	Spot Scan	400		1100	nm
V_{BR}	Breakdown Voltage	I = 10 μA	50	100		V
NEP	Noise Equivalent Power	V_R = 10V @ λ = Peak		1.8×10^{-13}		W/ $\sqrt{\text{Hz}}$
t_r	Response Time	RL = 1KΩ, V_R = 50 V		10		nS

Polarizarea fotodiodei - PC

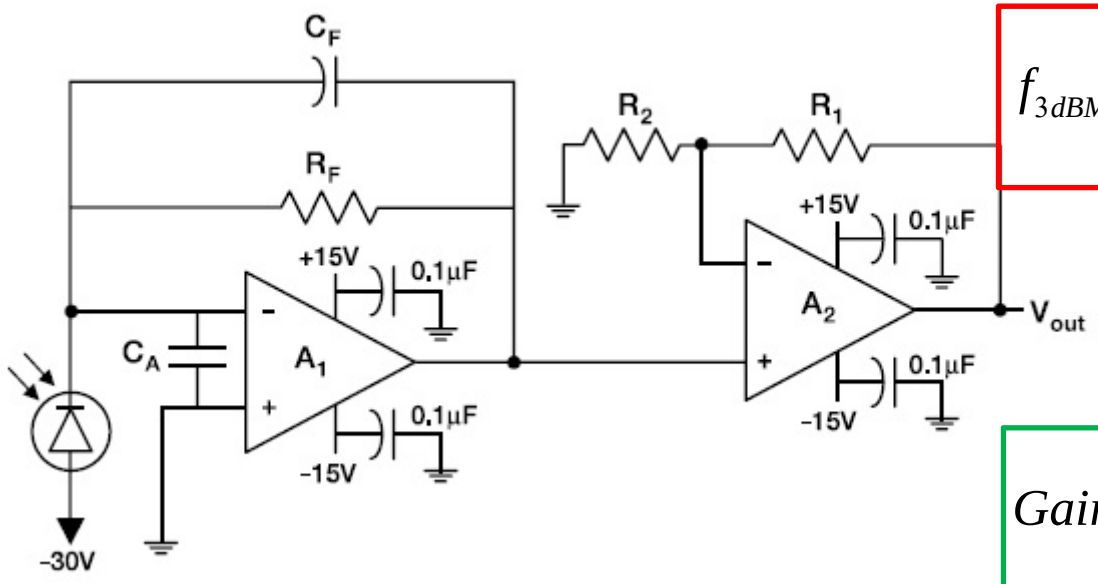

$$f_{3dBMax}[Hz] = \sqrt{\frac{GBP}{2\pi R_F\left(C_j + C_F + C_A\right)}} \quad (14)$$

$$Gain[V/W] = \frac{V_{OUT}}{P} = R_F\left(1 + \frac{R_1}{R_2}\right)R_\lambda \quad (15)$$

Amplifier :	OPA-637, OPA-846, OPA-847, or similar
R_F:	1 to 10 KΩ Typical, depending on C_j
R_1:	10 to 50 kΩ
R_2:	0.5 to 10 kΩ
C_F:	0.2 to 2 pF

Polarizarea fotodiodei – PC_2

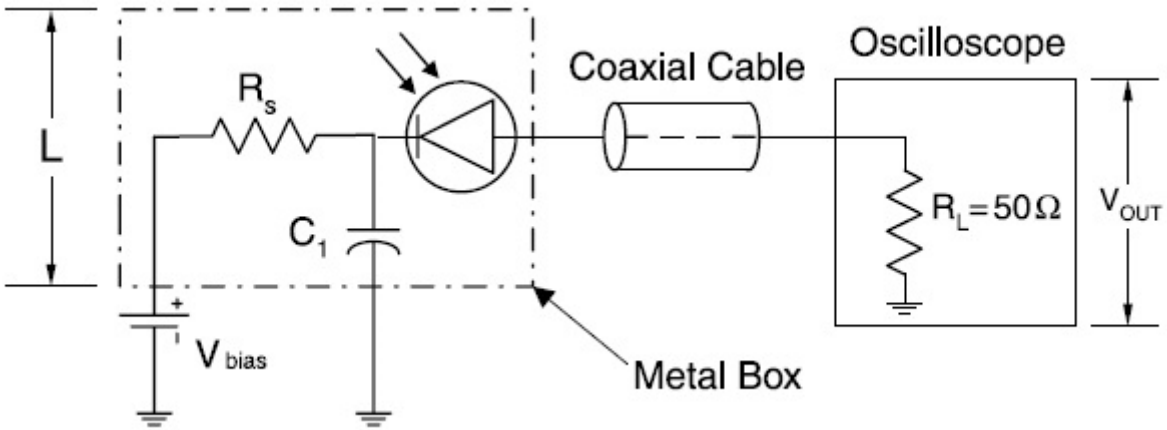

Polarizarea fotodiodei - PV

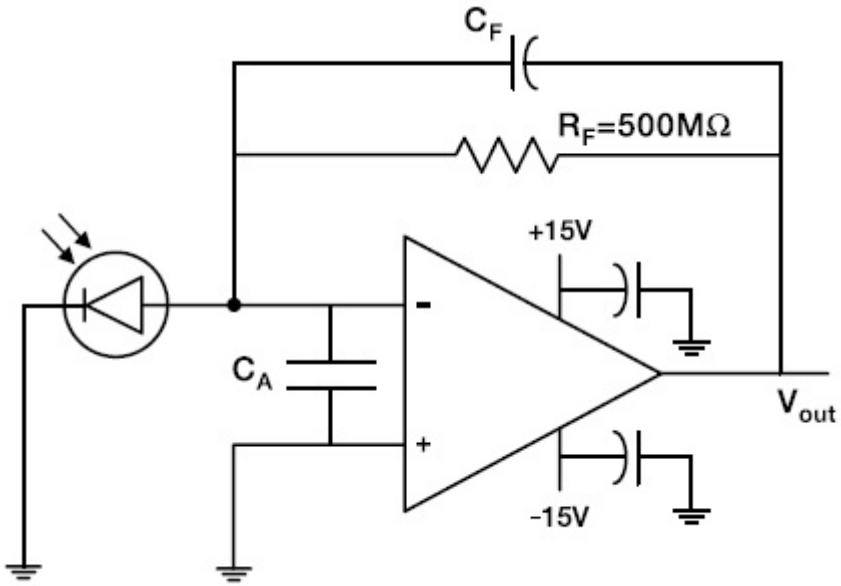

$$f_{OP}[Hz] = \frac{1}{2\pi R_F C_F} \quad (16)$$

$$V_{OUT} = R_F \times I_P \quad (17)$$

$$I_N \left[\frac{A}{\sqrt{Hz}} \right] = \sqrt{\frac{4k_B T}{R_F}} \quad (18)$$

Amplifier :	OPA111, OPA124, OPA627 or similar
R_F :	500 MΩ

$$\sqrt{\frac{GBP}{2\pi R_F \left(C_j + C_F + C_A\right)}} > \frac{1}{2\pi R_F C_F} \quad (19)$$

Polarizarea fotodiodei – PV_2

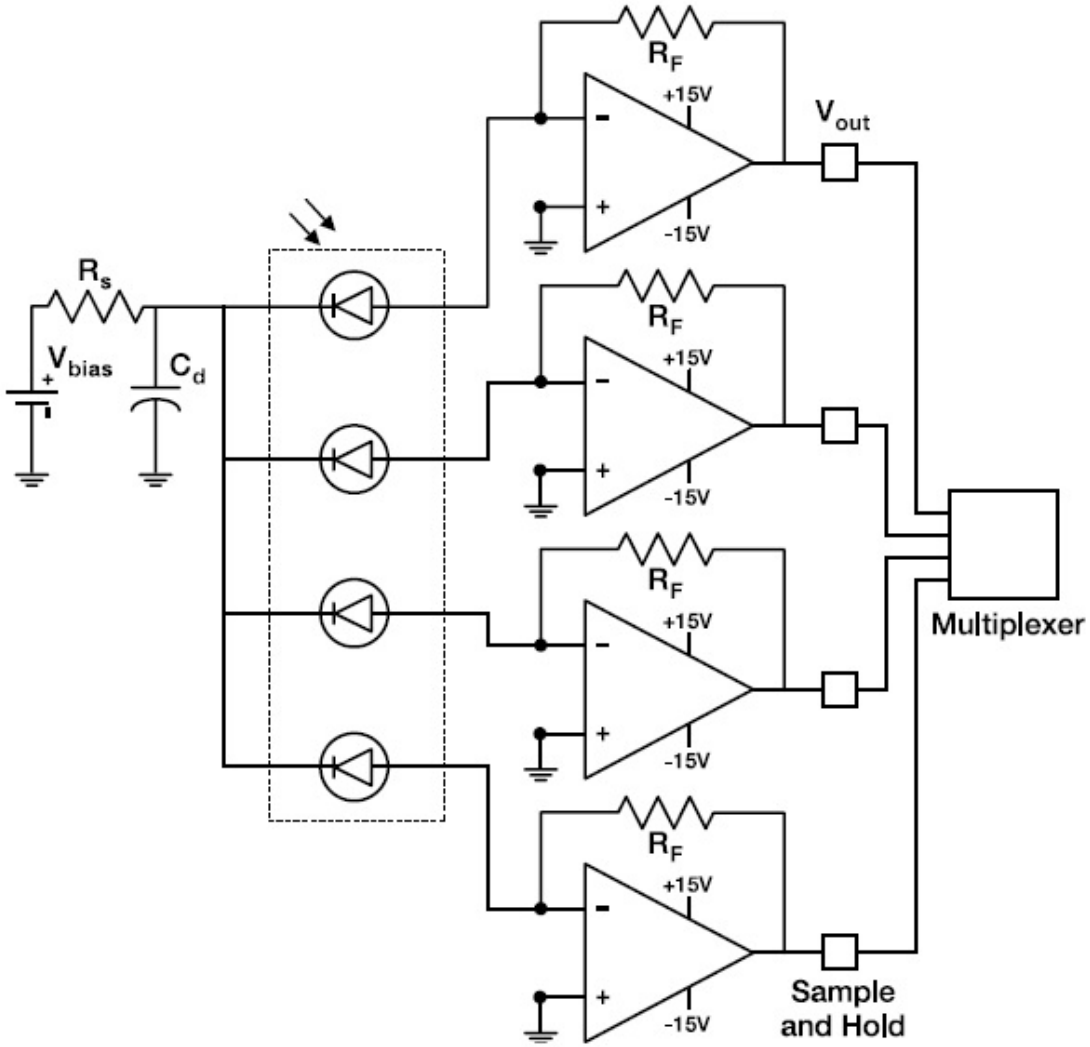

Proiectarea Receptorului Optic

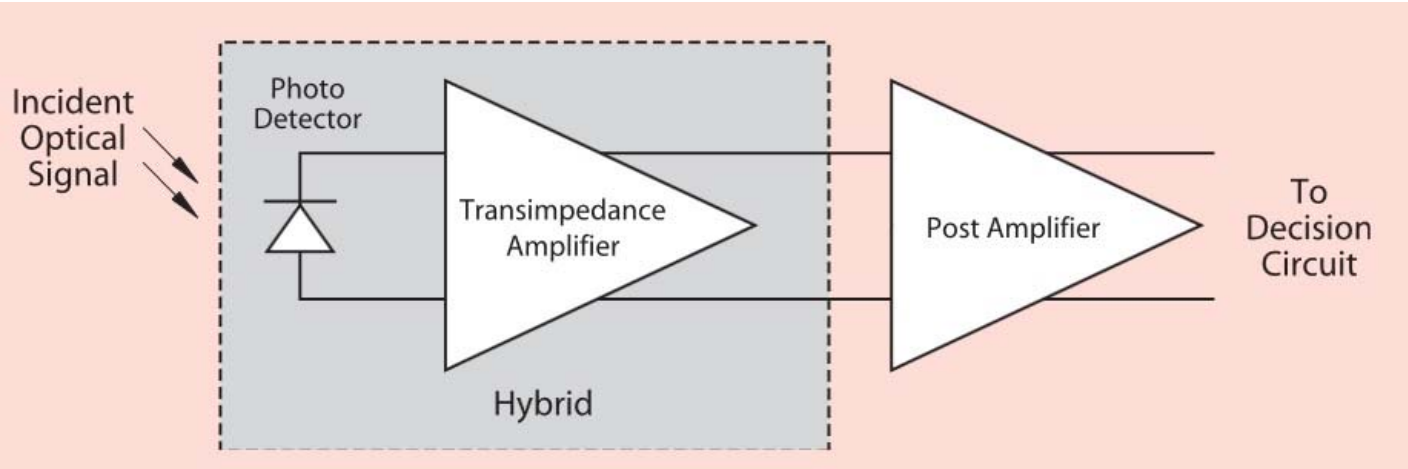

Proiectarea Receptorului Optic

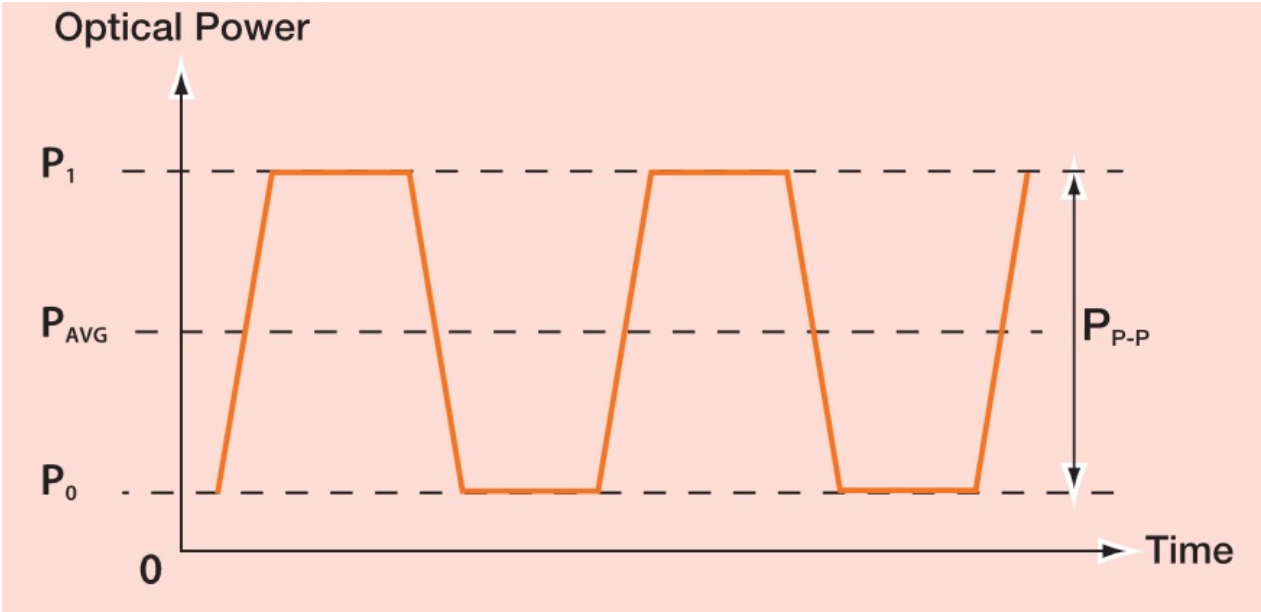

$$P_{AVG} = \frac{P_0 + P_1}{2} \quad (20)$$

$$P_{P-P} = P_1 - P_0 \quad (21)$$

Proiectarea Receptorului Optic

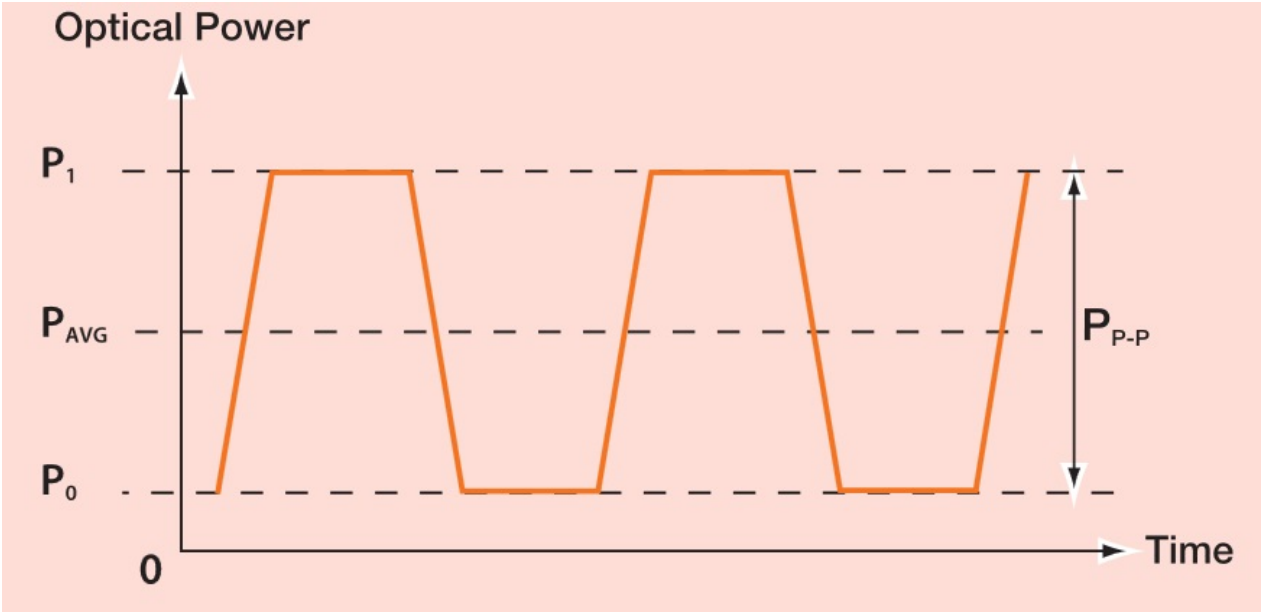

$$r_e = \frac{P_1}{P_0} \quad (22)$$

$$r_e(dB) = 10\,log\left(\frac{P_1}{P_0}\right)$$

$$P_{AVG} = \frac{1}{2}\frac{(r_e+1)}{(r_e-1)}P_{P-P} \quad (23)$$

EXEMPLU

Proiectarea Receptorului Optic

$$P_{AVG} = -17dBm$$
$$r_e = 9dB$$

$$P_{AVG} = 20\mu W$$
$$r_e = 7.94$$

$$P_{P-P} = 2\frac{(r_e - 1)}{(r_e + 1)}P_{AVG}$$
$$= 2\frac{(7.94 - 1)}{(7.94 + 1)} \times 20\mu W = 1.55 \times 20\mu W = 31\mu W_{P-P} \quad (24)$$

Sensibilitate si BER

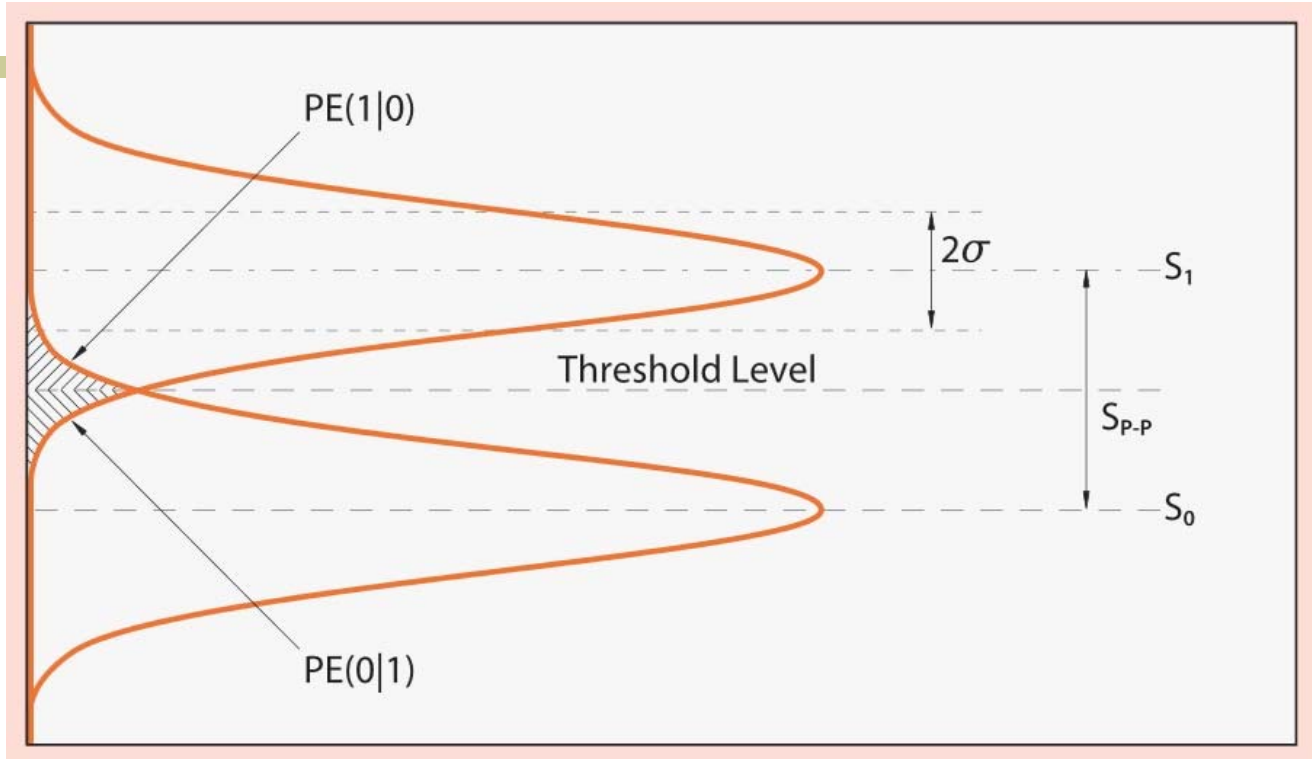

$$PE = \frac{1}{2}\left[PE\left(0|1\right) + PE\left(1|0\right)\right] \quad (25)$$

$$D_P\left(X\right) = \frac{1}{\sigma\sqrt{2\pi}} exp\left(-\frac{\left(X-\mu\right)^2}{2\sigma^2}\right) \quad (26)$$

Sensibilitate si BER - 2

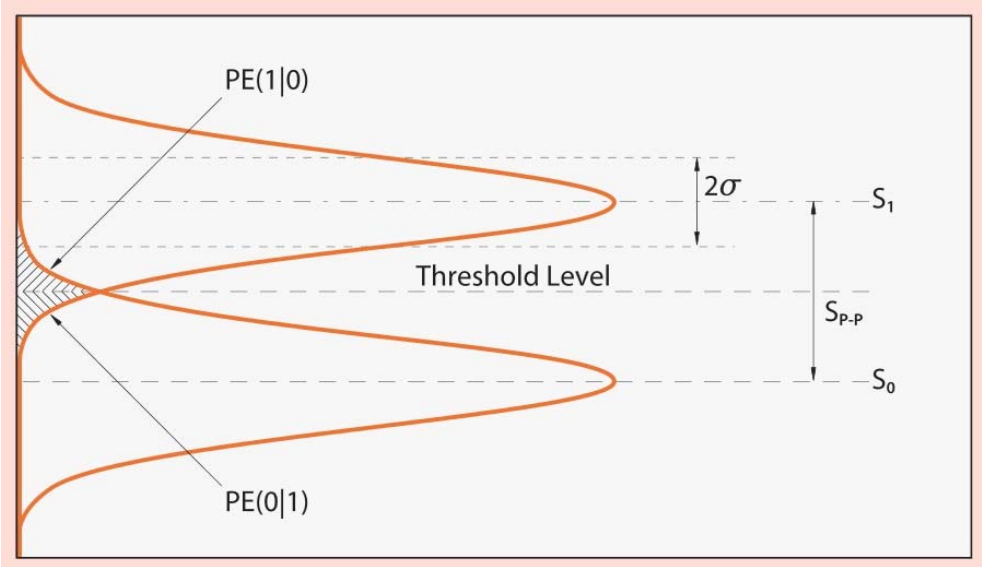

$$PE(1|0) = \int_{Prag}^{\infty} D_{P_0}(X)\,dX \quad (27)$$

$$PE(1|0) = \int_{S_{P-P}/2}^{\infty} \frac{1}{\sigma\sqrt{2\pi}} exp\left(-\frac{(X)^2}{2\sigma^2}\right) dX \quad (28)$$

$$t = \frac{X}{\sigma} \quad (29)$$

$$PE(1|0) = \int_{S_{P-P}/2\sigma}^{\infty} \frac{1}{\sqrt{2\pi}} exp\left(-\frac{t^2}{2}\right) dt \quad (30)$$

Sensibilitate si BER - 3

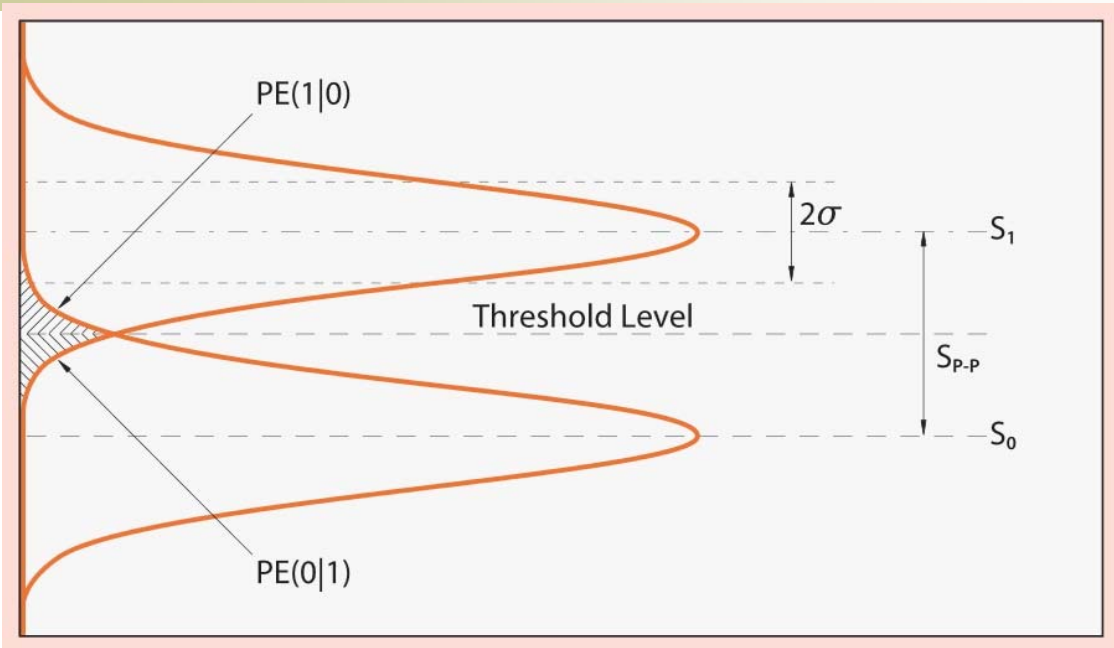

$$PE = erfc\left(\frac{SNR}{2}\right) \quad (31)$$

$$erfc(x) = \int_x^{\infty} \frac{1}{\sqrt{2\pi}} exp\left(-\frac{t^2}{2}\right) dt \quad (32)$$

Sensibilitate si BER - 4

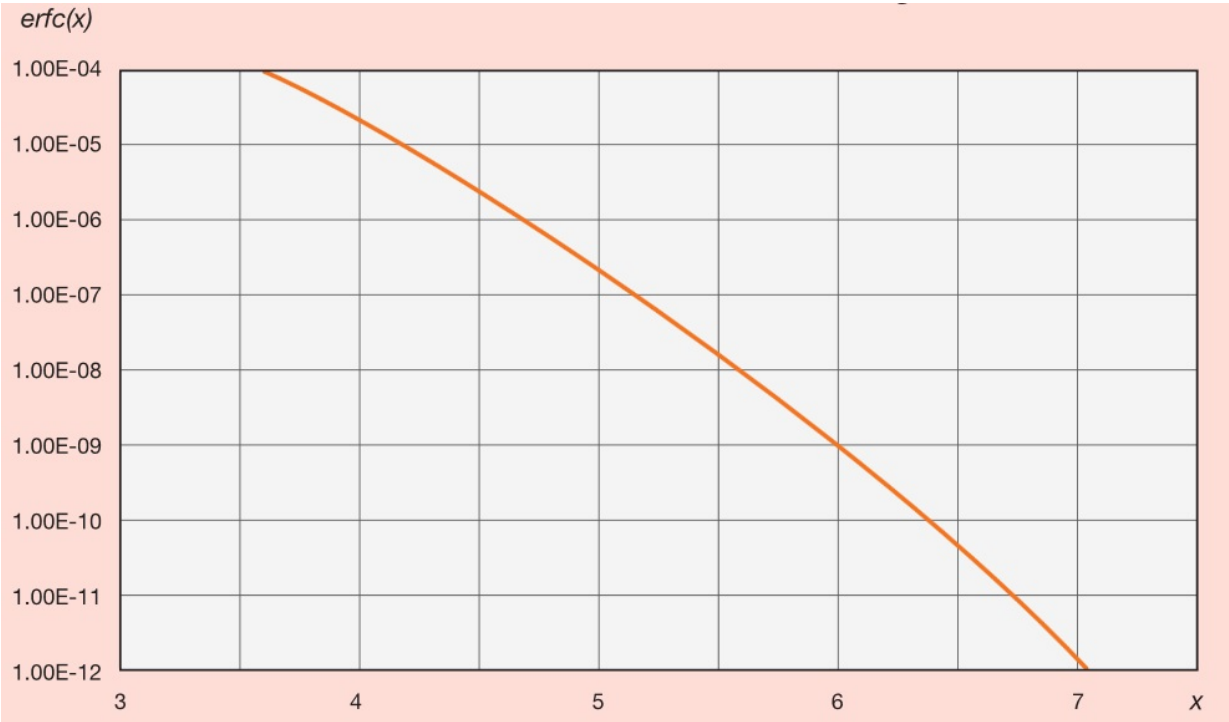

BER	10^{-08}	10^{-09}	10^{-10}	10^{-11}	10^{-12}
SNR	11.22	11.99	12.72	13.40	14.06

Sensibilitate si BER - 5

$$SNR = \frac{I_{P-P}}{I_{N,ef}} = \frac{P_{P-P} \times R_{\lambda}}{I_{N,ef}} \quad (33)$$

$$P_{P-P} = \frac{SNR \times I_{N,ef}}{R_{\lambda}} \quad (34)$$

$$S = P_{AVG@BER} = \frac{SNR \times I_{N,ef}}{2R_{\lambda}} \frac{r_e + 1}{r_e - 1} \quad (35)$$

r_e, dB	7.00	8.00	9.00	10.00	∞
r_e	5.01	6.31	7.94	10.00	∞
Power Penalty, dB	1.76	1.39	1.10	0.87	0

Sensibilitate si BER - 6

$$\Delta I_{PA} = \frac{V_{TH}}{R_{TIA}} \quad (36)$$

$$P_{P-P} = \frac{SNR \times I_{N,ef} + \Delta I_{PA}}{R_{\lambda}} \quad (37)$$

$$S = \frac{SNR \times I_{N,ef} + \frac{V_{TH}}{R_{TIA}}}{2R_{\lambda}} \times \frac{r_e + 1}{r_e - 1} \quad (38)$$

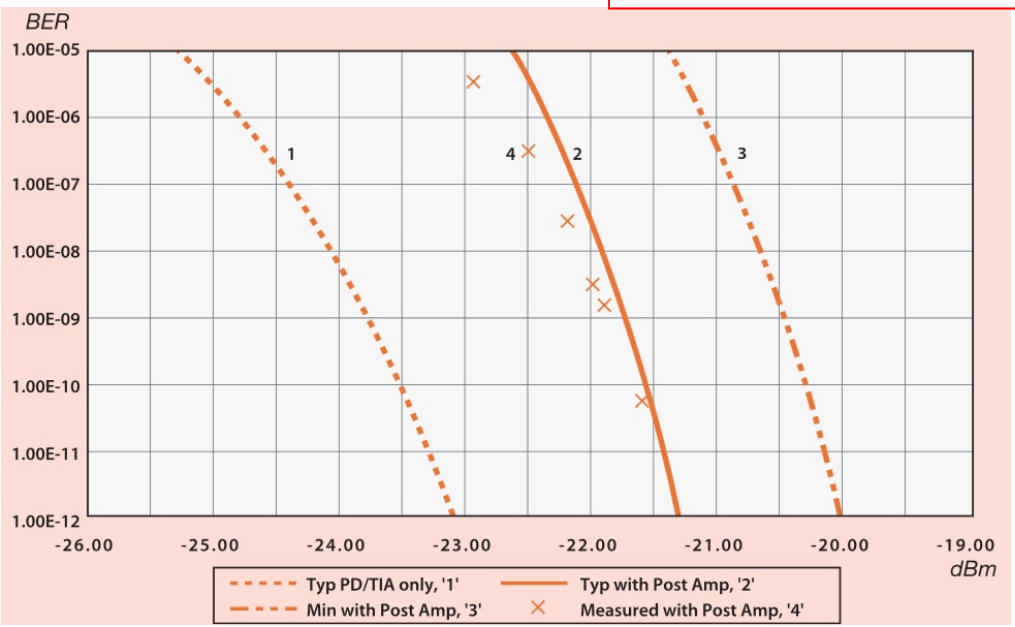

Sensibilitate si BER

Exemplu

Sa calculam sensibilitatea unui hibrid InGaAs PD/TIA, pentru 2.5 Gbps, la un BER = 10e(-10), presupunind responsivitatea detectorului de 0.9 A/W, curentul efectiv de zgomot transpus la intrarea amplificatorului cu transimpedanta egal cu 500 nA, si raportul de stingere al semnalului optic 9 dB.

$$BER = 10^{-10} \qquad SNR = 12.72$$

$$r_e = 9dB = 7.94$$

$$S = \frac{12.72 \times 0.5\mu A(7.94+1)}{2 \times 0.9\, A/W\,(7.94-1)} = 4.56\mu W = -23.4dBm$$

$$V_{TH} = 10mV \qquad R_{TIA} = 2{,}8k\Omega$$

$$S = \frac{12.72 \times 0.5\mu A(7.94+1) + \frac{10mV}{2.8k\Omega}}{2 \times 0.9\, A/W\,(7.94-1)} = 7.11\mu W = -21.5dBm$$

FOTODIODE CU AVALANSA

Constructia fotodiodei cu avalansa

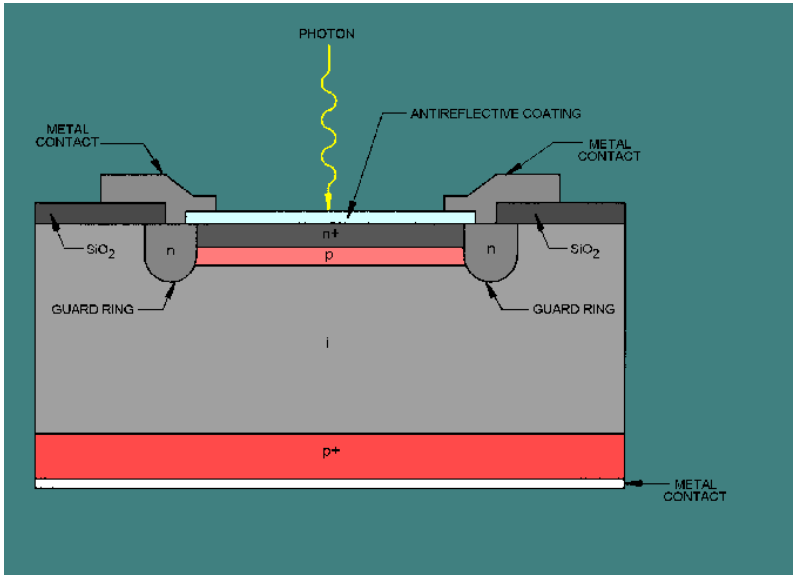

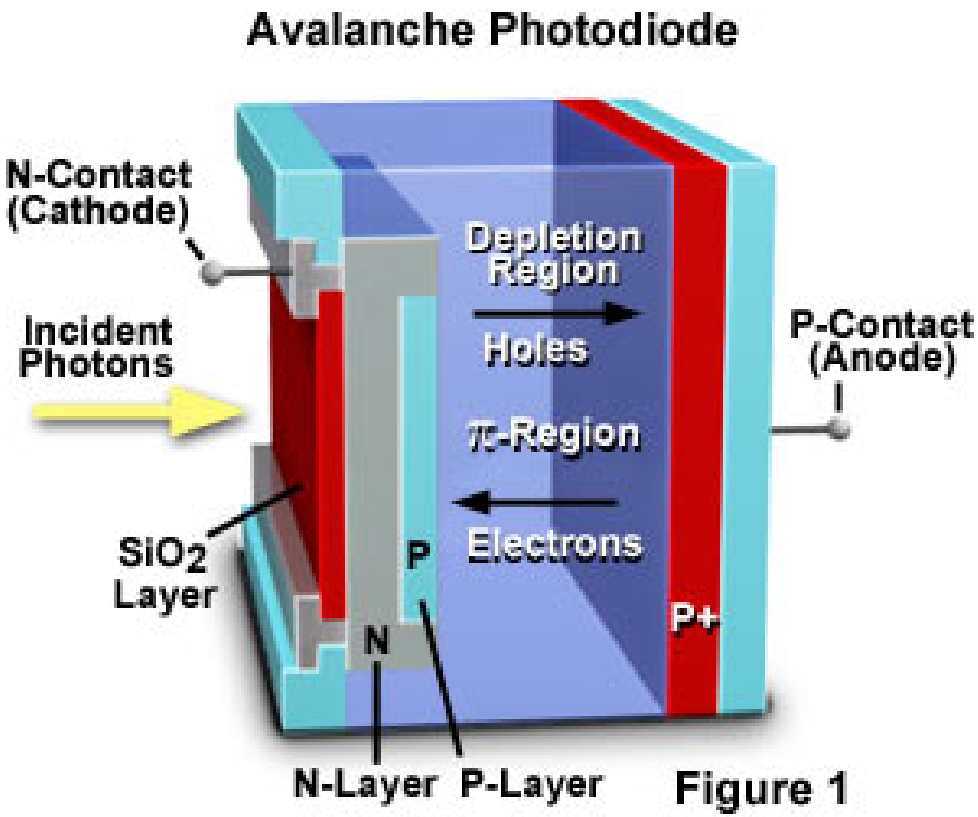

Functionarea fotodiodei cu avalansa

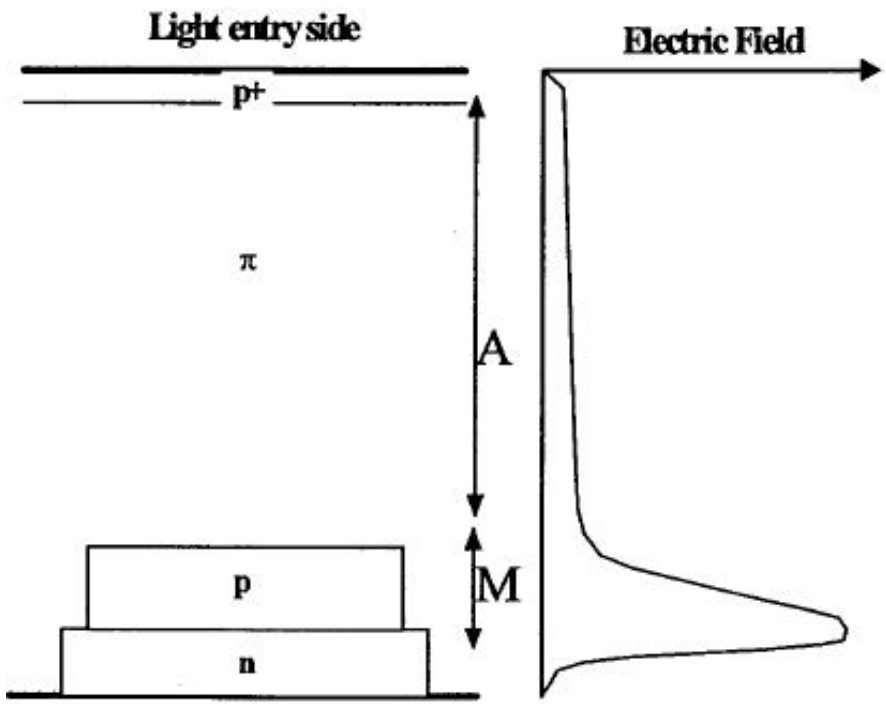

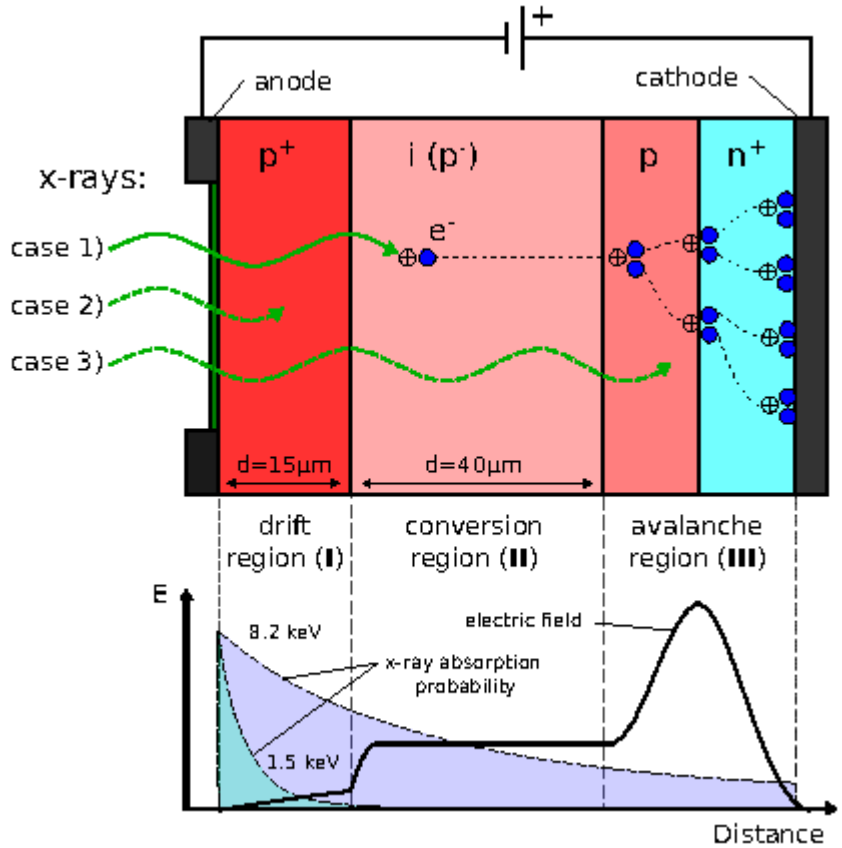

Curentul de intuneric

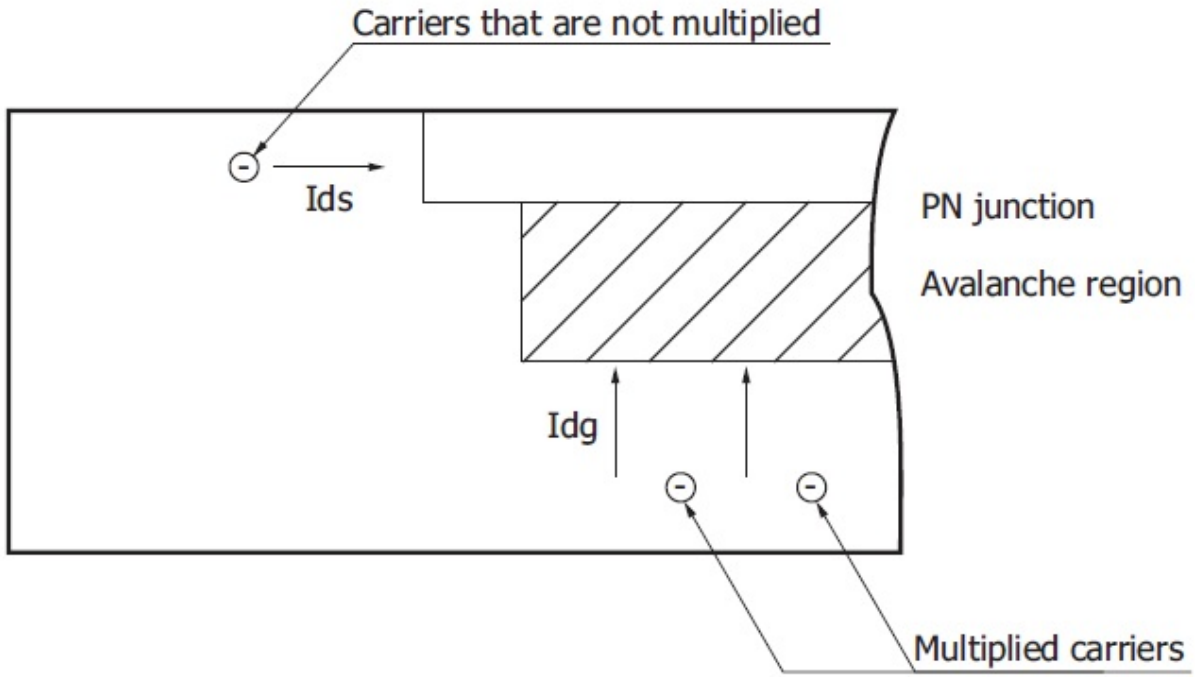

$$I_D = I_{ds} + MI_{dg} \qquad (39)$$

Caracteristica cistig – tensiune de polarizare

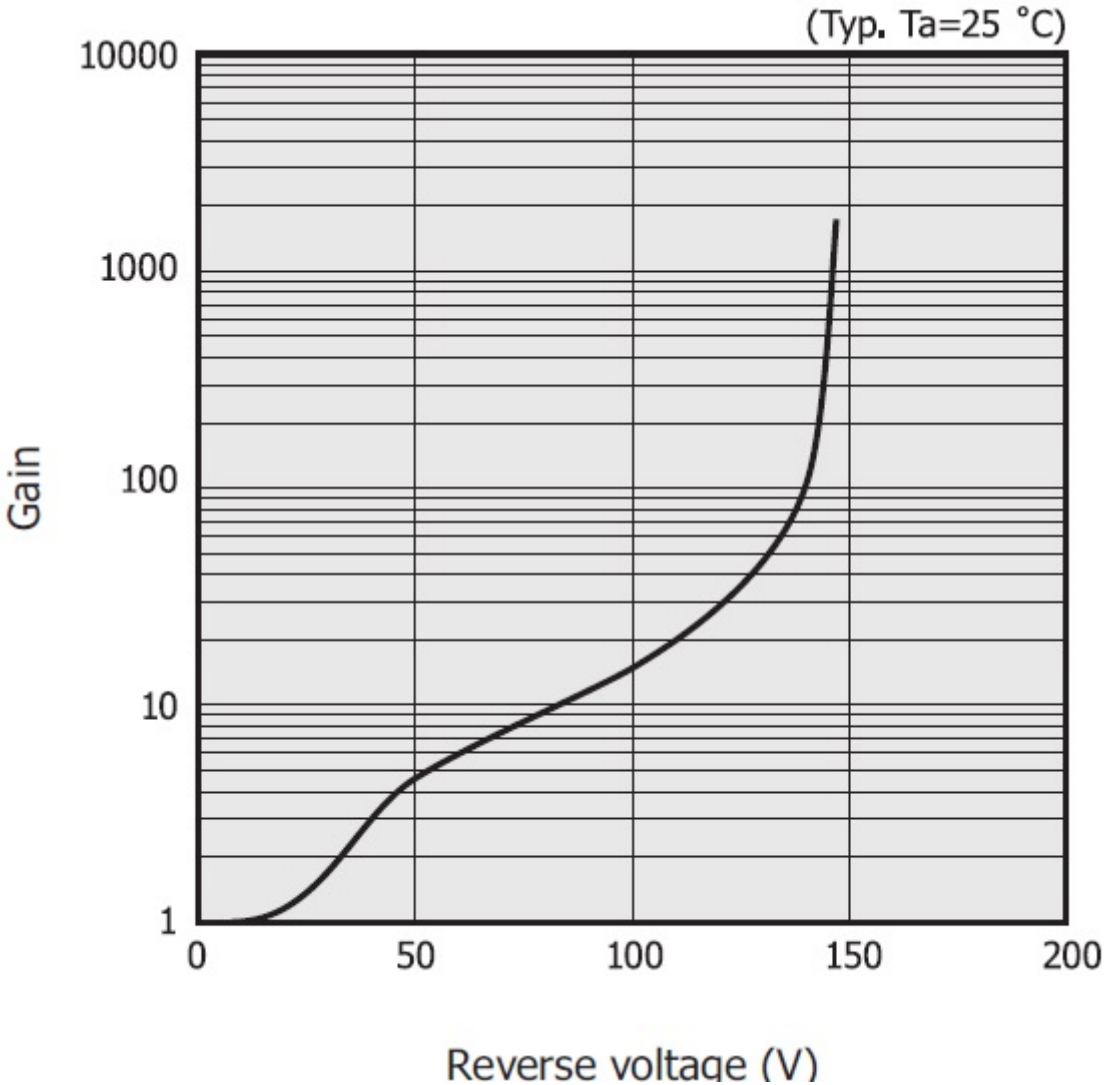

Caracteristica cistig – tensiune de polarizare

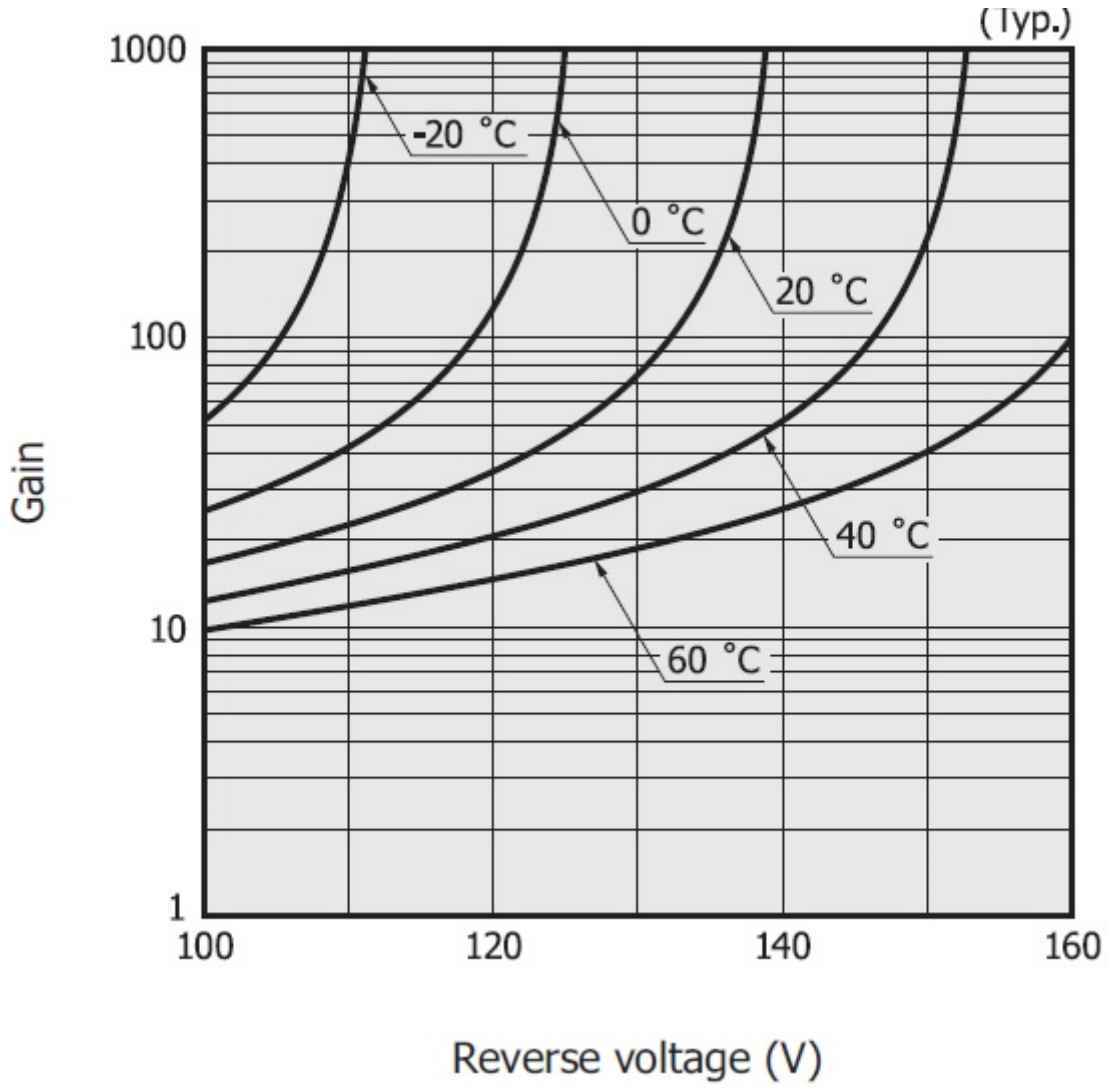

Parametrii de performanta ai APD

$$I_S = M \cdot R_0(\lambda) \cdot P_S \qquad (40)$$

Zgomotul in APD

$$I_n^2(APD) = 2q(I_L + I_{dg})M^2FB + 2qI_{ds}B \quad (41)$$

$$k = \frac{\beta}{\alpha} \quad (42)$$

$$F = kM + (1-k)(2-1/M) \quad (43)$$

$$F = k^{-1}M + (1-k^{-1})(2-1/M) \quad (44)$$

Raportul semnal-zgomot si NEP in APD

$$\frac{S}{N} = \frac{I_L^2 M^2}{2q(I_L + I_{dg})FBM^2 + 2qI_{ds}B + \frac{4kTB}{R_L}} \quad (45)$$

$$NEP = \frac{I_n}{MS} \quad (46)$$

Raportul semnal-zgomot si NEP in APD

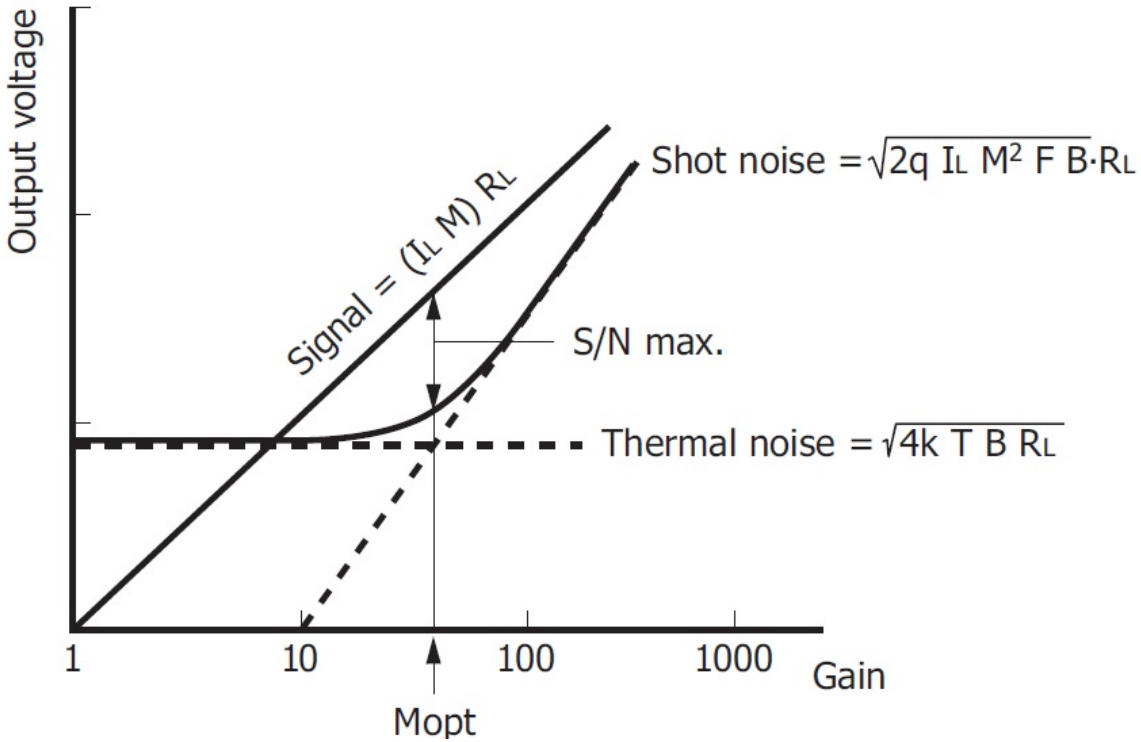

$$M_{opt} = \left[\frac{4kT}{q\left(I_L + I_{dg}\right)R_L} \right]^{\frac{1}{2+x}} \qquad (47)$$

Raspunsul spectral

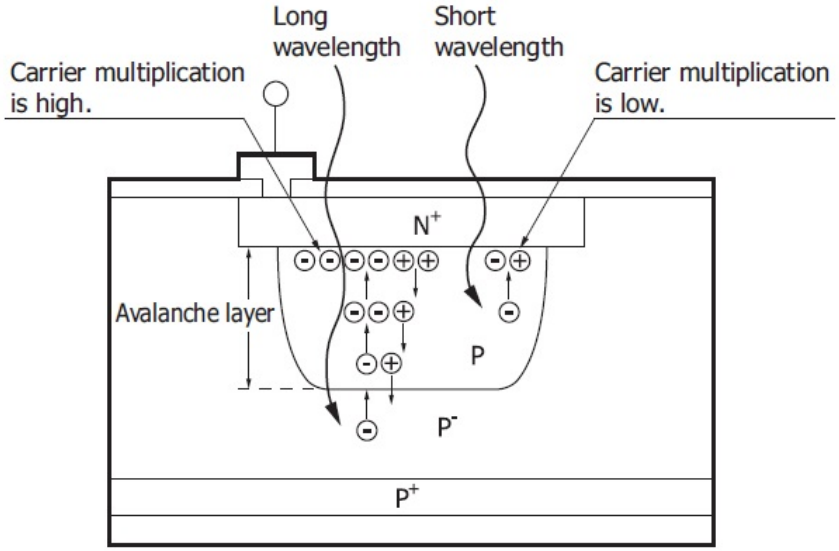

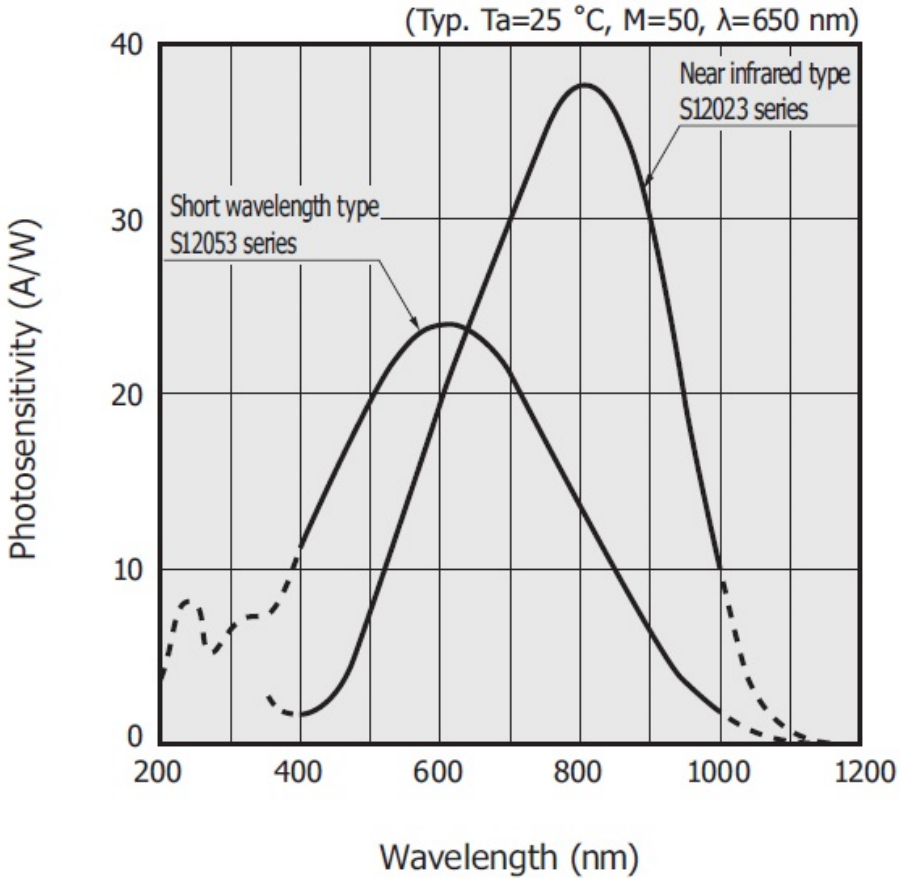

Caracteristica de frecventa

$$f_c\left(RC\right)=\frac{1}{2\pi C_t R_L} \quad (48)$$

$$t_r=\frac{0.35}{f_c\left(RC\right)} \quad (49)$$

$$f_c\left(t_{rd}\right)=\frac{0.44}{t_{rd}} \quad (50)$$
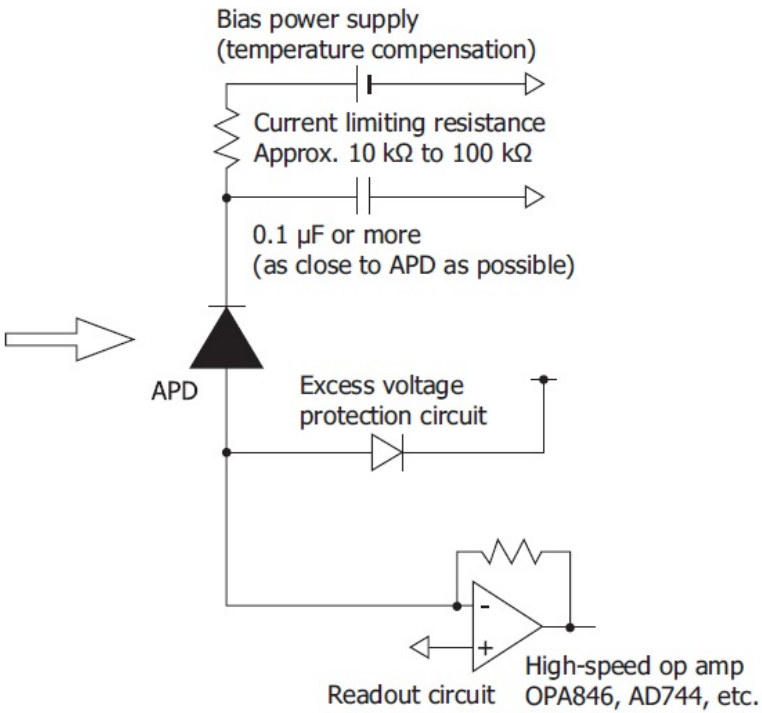
Conectarea la circuitul exterior